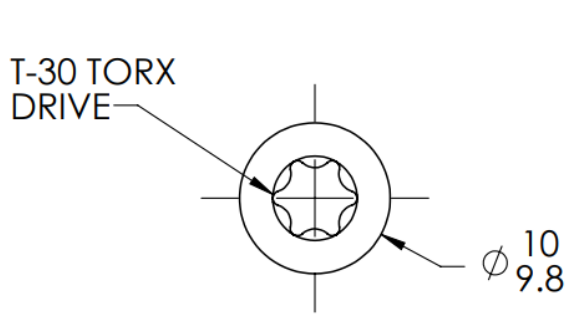

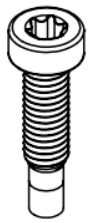

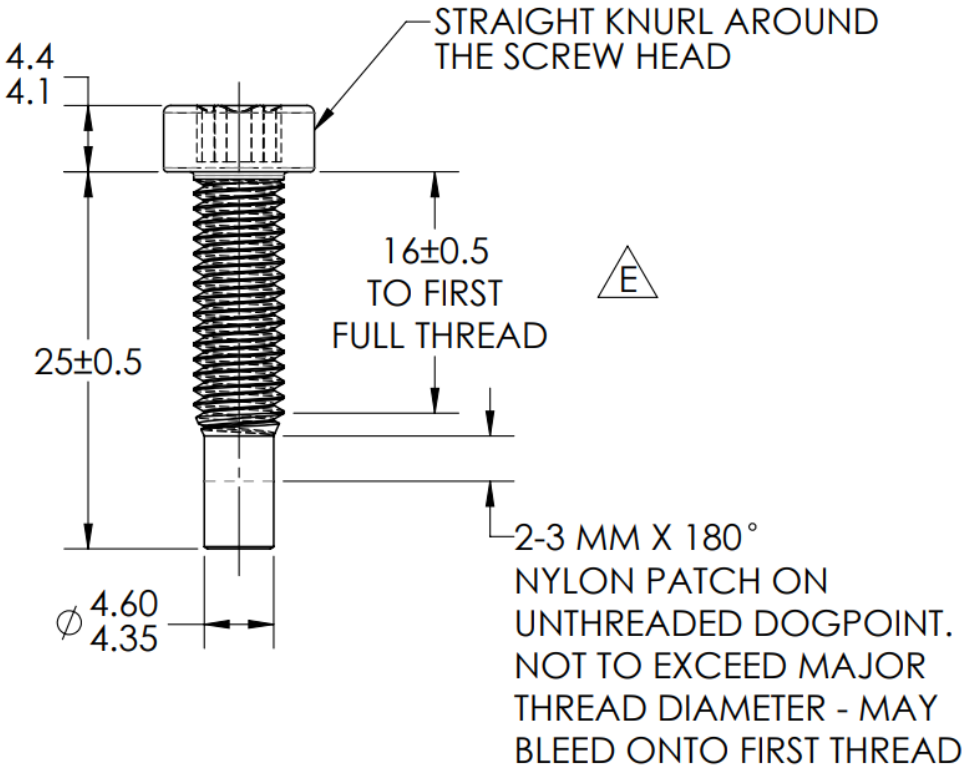

METRIC

NOTES:
1. SPECIAL LOW HEAD HEXALOBULAR (TORX) SOCKET HEAD CAP SCREW.
2. MATERIAL: MILD STEEL. PROPERTY CLASS 4.8.
3. FINISH: ZINC, CLEAR PER SPEC. 87791677 E

PART NO. 89136106	E	ADD NOTE TO THRD DIM; ADD PLATING SPEC TO NOTES	ECO-178774	11/7/16	HDL	---
MATERIAL SEE NOTES	REV.	DESCRIPTION	ECO/PDP	DATE	BY	ENG
FINISH SEE NOTES						

TOLERANCE UNLESS NOTED
ZERO PLACE X ± 2.5
ONE PLACE .X ± 0.8
TWO PLACE .XX ± 0.38
HOLE DIA ± 0.13
ANGLES ± 2°

SCALE NONE
DRAWN HDL
CHECKED ---
APPROVED ---
DATE 2/26/16

TITLE
SCR, SOHDTXM; M6X1.0 X 25

SolidWorks Drawing

THIRD ANGLE PROJECTION

DO NOT SCALE DRAWING

SIZE **A**

DRAWING NO. 89136106

SHEET 1 OF 1